SUGGESTED PROCEDURE FOR INSTALLATION OF WOOD BURNING STOVES

PASSING THROUGH WALLS OR FLOORS

IF AT ALL POSSIBLE AVOID GOING THROUGH WALLS OR CEILINGS.

WALLS: A CORRECT THIMBLE MUST BE USED.

PREFERABLE USE AN ALL FUEL FIRE STOP SPACER, THIMBLE OR CONNECTOR.

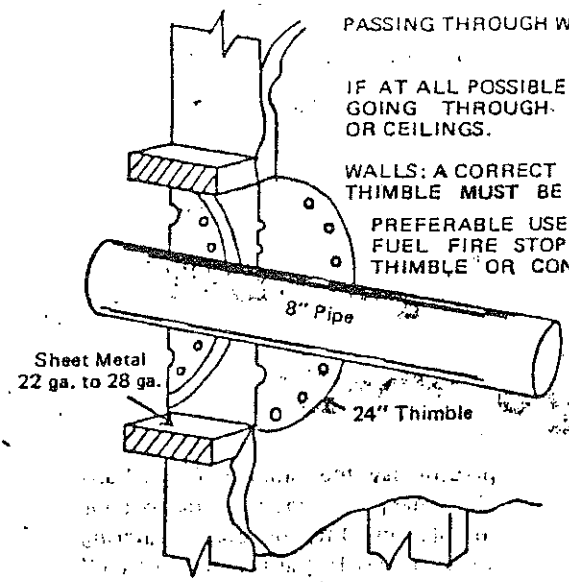

IF A THIMBLE IS TO BE BUILT, IT MUST BE THREE TIMES THE DIAMETER OF THE PIPE AND WELL VENTILATED TO ALLOW AIR MOVEMENT.

LINE INSIDE FRAMING WITH SHEET METAL.

CEILINGS: WHEN YOU MUST PASS THROUGH A CEILING, THE ALL FUEL CONNECTOR OR FIRE STOP SPACER MUST BE USED AND INSTALLED ACCORDING TO THE MANUFACTURER'S REQUIREMENTS.

CONNECTICUT THE STOVE PIPE TO A CHIMNEY, THROUGH A WALL

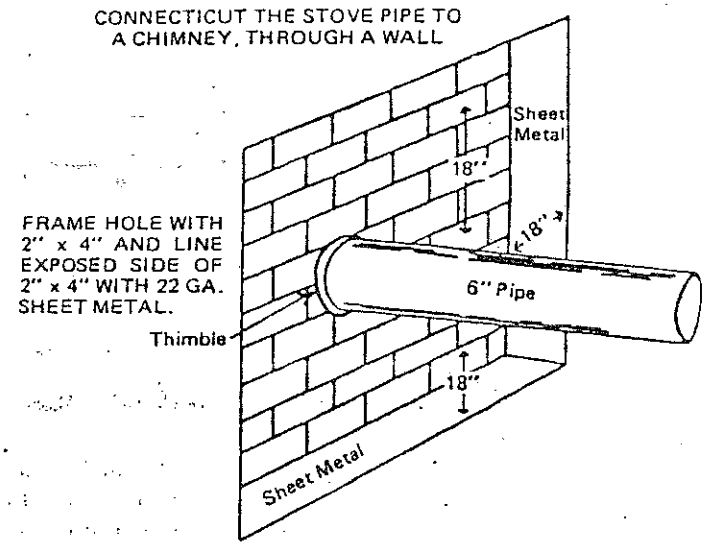

FRAME HOLE WITH 2" x 4" AND LINE EXPOSED SIDE OF 2" x 4" WITH 22 GA. SHEET METAL.

USE A THIMBLE AT CHIMNEY.

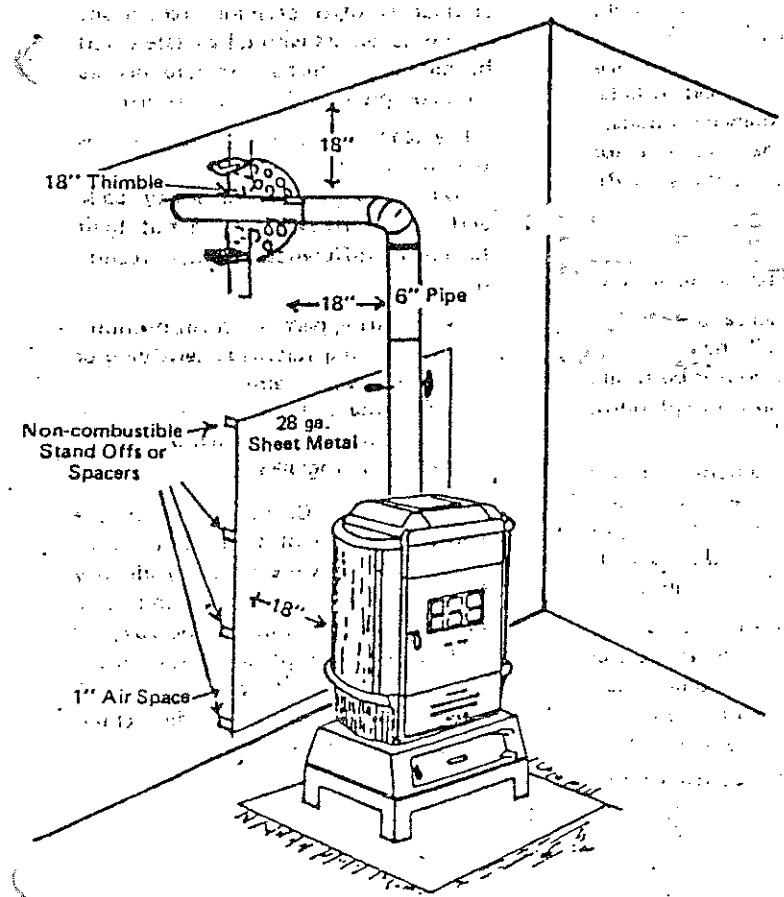

ALL STOVE LEGS SHOULD BE 4" TO 6" LONG. STOVE MUST BE ON A STOVE BOARD*

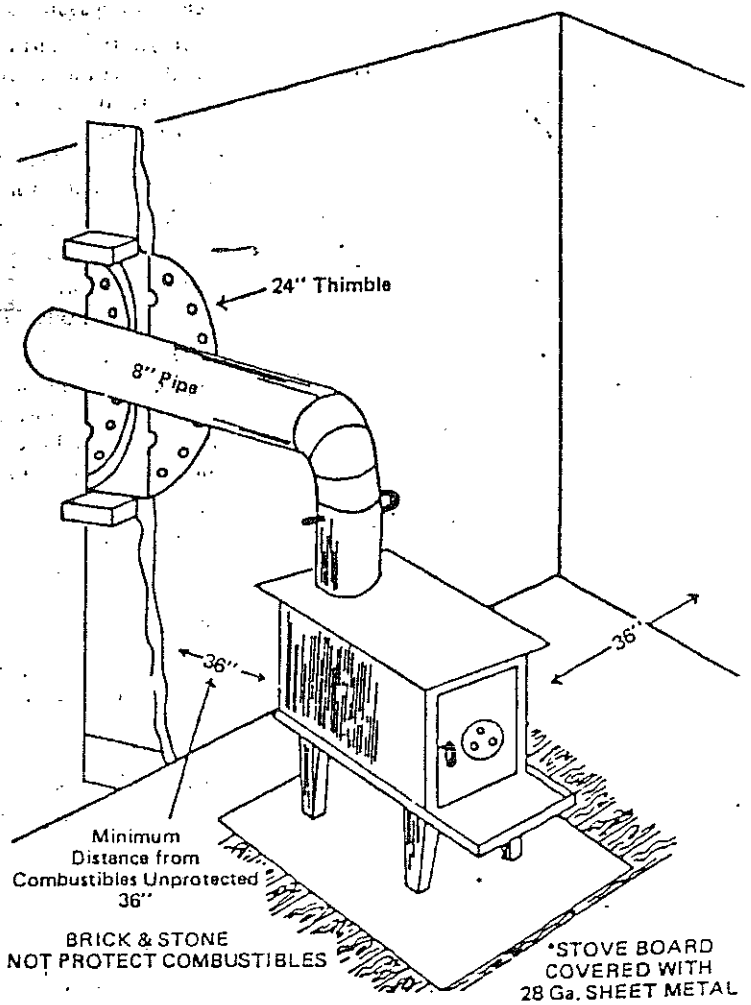

BRICK & STONE DO NOT PROTECT COMBUSTIBLES

*STOVE BOARD COVERED WITH 28 Ga. SHEET METAL

Compliments of

PEERLESS INSURANCE COMPANY
NETHERLANDS INSURANCE COMPANY